Technical data standard range

Ball bearing without gearing

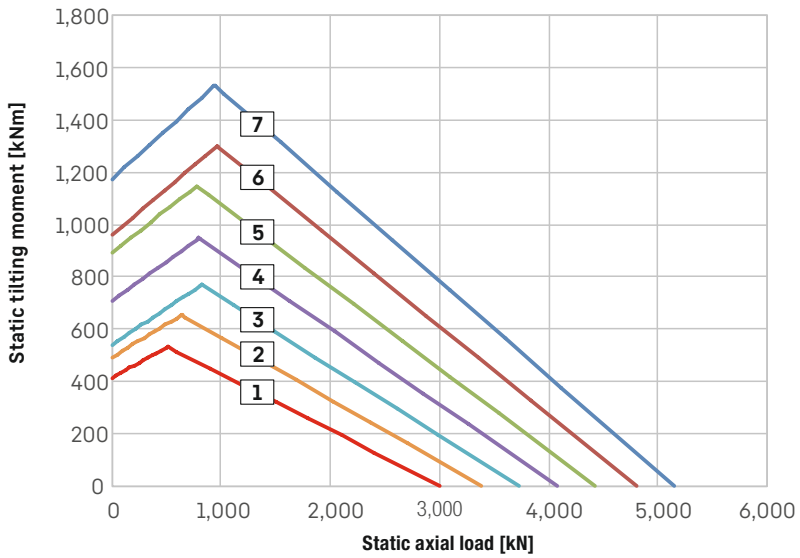

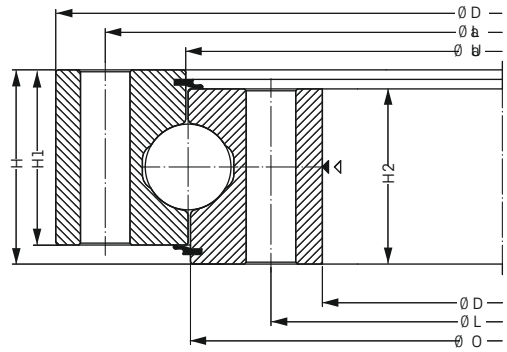

1 KUD00855-025VO15-900-000
2 KUD00955-025VO15-900-000
3 KUD01055-025VO15-900-000
4 KUD01155-025VO15-900-000
5 KUD01255-025VO15-900-000
6 KUD01355-025VO15-900-000
7 KUD01455-025VO15-900-000

	Bearing data								Bolt data					Gear data								Load rating	
Bearing type	Weight	Outer diameter	Inner diameter	Total height	Outer diameter Inner ring	Inner diameter Outer ring	Height Outer ring	Height Inner ring	Pitch circle diameter Outer ring	Pitch circle diameter Inner ring	Number of bores per ring	Bolt diameter	Number of grease nipples per level	Pitch circle diameter	Module (metric)	Number of teeth	Profile shift	Tip reduction	Tooth width	Tooth forces (standard)	Tooth forces (maximum)	static	dynamic
		Da	Di	H	O	U	H1	H2	La	Li	n	M	n1	d	m	z	x*m	k*m	b			C_{stat}	C_{dyn}
	[kg]	[mm]	[mm]	[mm]	[mm]	[mm]	[mm]	[mm]	[mm]	[mm]		[mm]		[mm]	[mm]		[mm]	[mm]	[mm]	[kN]	[kN]	[kN]	[kN]
1	100	955	755	63	855	855	54	54	915	795	28	20	4	-	-	-	-	-	-	-	-	3,004	423
2	113	1,055	855	63	955	955	54	54	1,015	895	30	20	6	-	-	-	-	-	-	-	-	3,383	443
3	124	1,155	955	63	1,055	1,055	54	54	1,115	995	30	20	6	-	-	-	-	-	-	-	-	3,731	459
4	139	1,255	1,055	63	1,155	1,155	54	54	1,215	1,095	36	20	6	-	-	-	-	-	-	-	-	4,079	474
5	148	1,355	1,155	63	1,255	1,255	54	54	1,315	1,195	42	20	6	-	-	-	-	-	-	-	-	4,427	489
6	161	1,455	1,255	63	1,355	1,355	54	54	1,415	1,295	42	20	6	-	-	-	-	-	-	-	-	4,806	505
7	171	1,555	1,355	63	1,455	1,455	54	54	1,515	1,395	48	20	6	-	-	-	-	-	-	-	-	5,154	518

Have you already found the right slewing bearing – or are you still looking? Simply contact us, we will help you quickly and easily: components@liebherr.com

Technical changes and errors reserved. Variances depending on application are possible.

Liebherr-Components AG
Post box 222 · 5400 Baden, Switzerland
+41 56 296 43 00 · www.liebherr.com

LIEBHERR